CPX Container 500L rektangulär 3"

Transport container with metal frame - with 3" moulded in external thread. Container designed for slow moving liquids. When handling really slow products please contact us to find the right container. **Not UN-certified for ADR-goods.**

Art.nr: 40503

Requires single door

Approximate size

Specifications	
Material	PE
Shape	Rectangular
Bottom shape	Conical
Design	Closed
Lid type	
Color	Natural
Volume (L)	500
Length (mm)	1200
Width (mm)	800
Height (mm)	1160
Surface area (m2)	0.96
Weight (kg)	70
Tollstatistical code	3925100000
Recycling	2 HDPE

Characteristics

Customizable containers

Recyclable

Wide temperature range

Chemical resistance

Leak test

Logistics solutions

Suitable for food contact

Easy to clean

Printed 16/04/2024

Ändrings Nr	Ändringens art / Ändringsmeddelande	Godkänd av	Datum

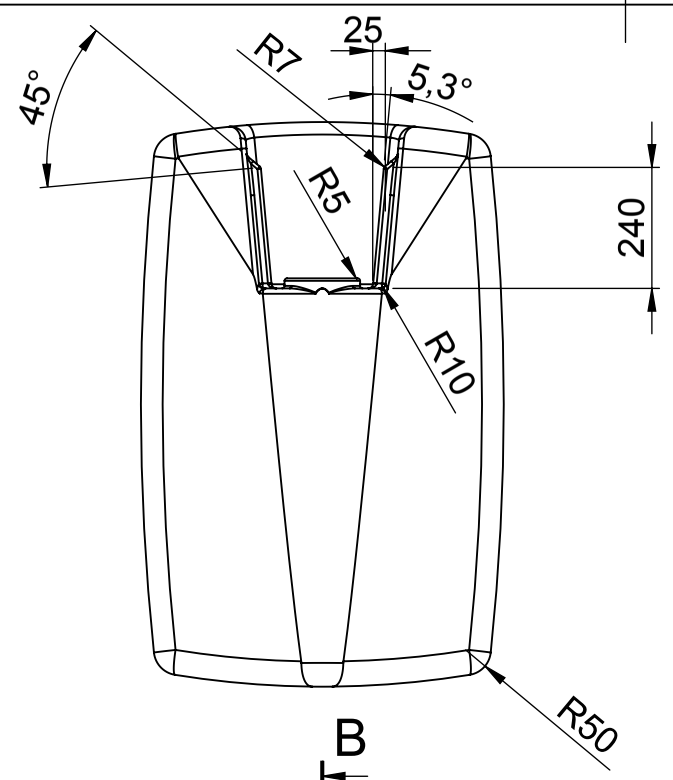

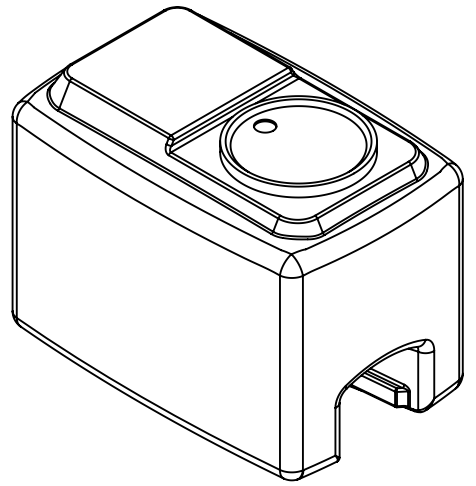

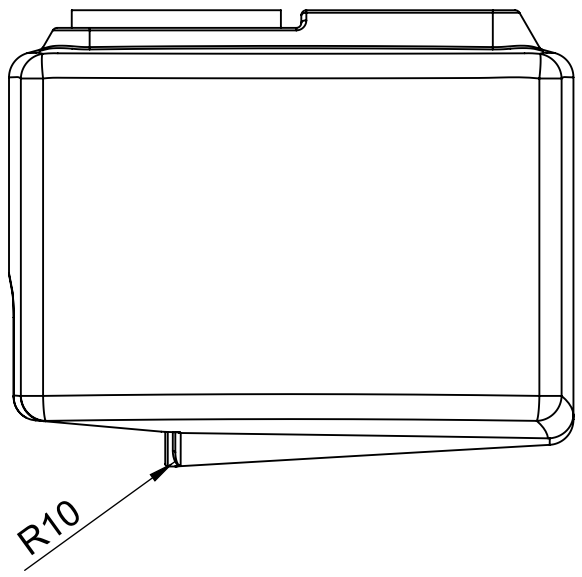

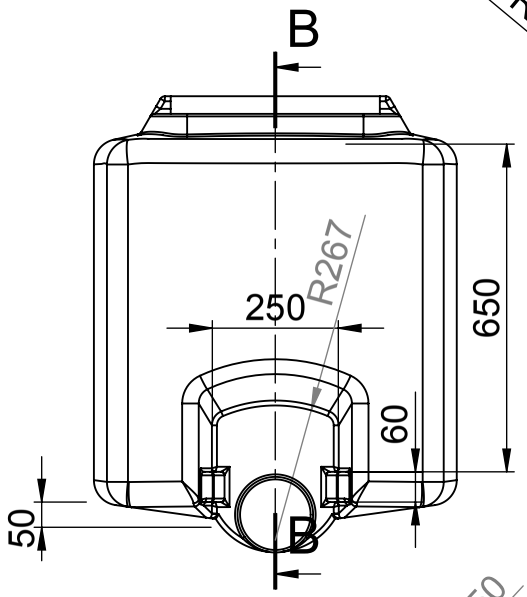

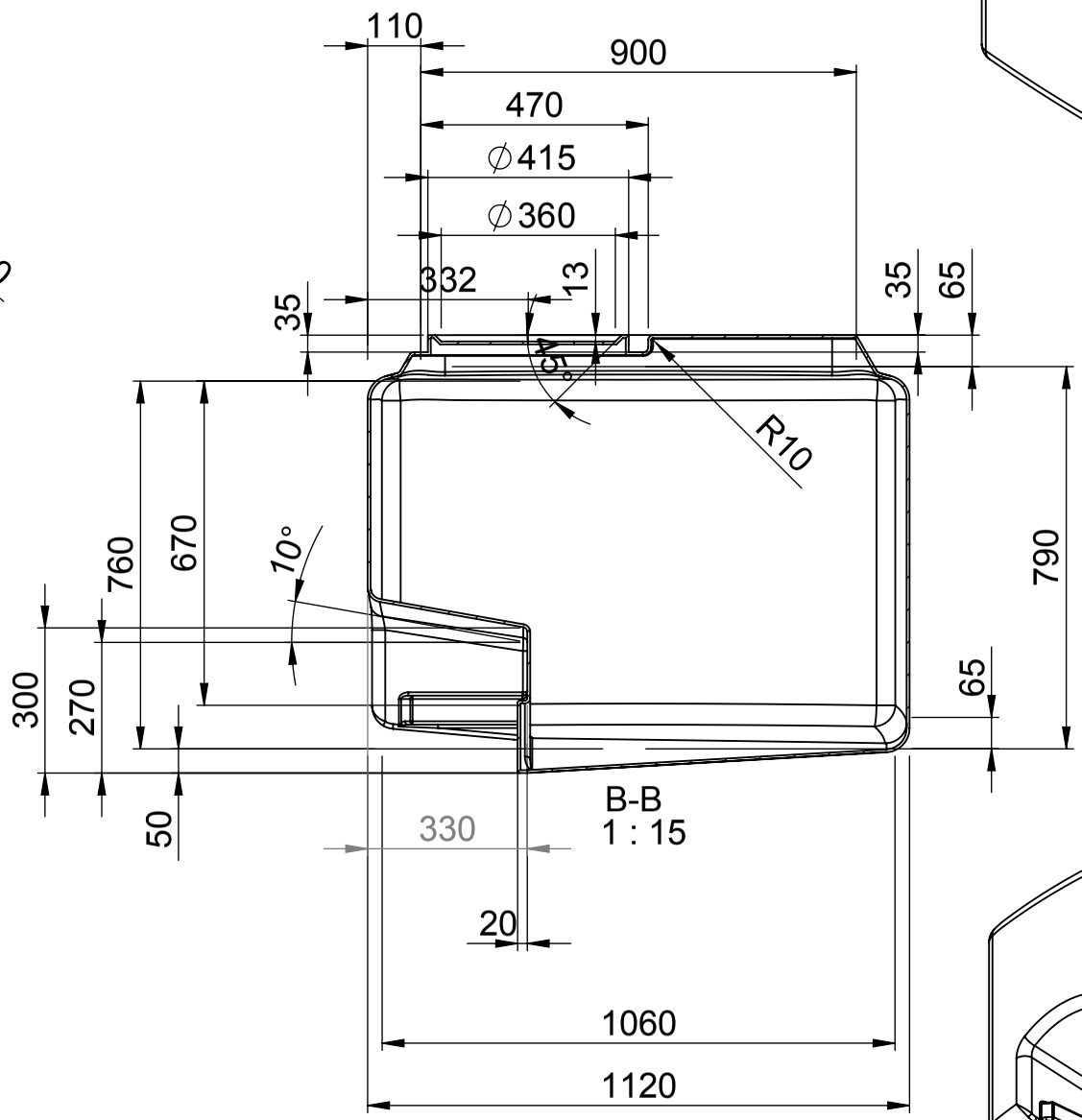

B-B
1 : 15

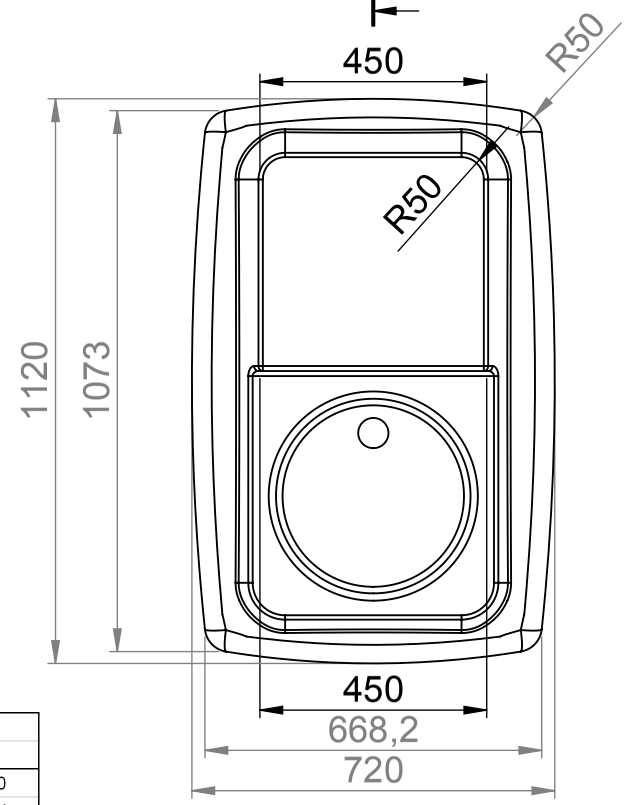

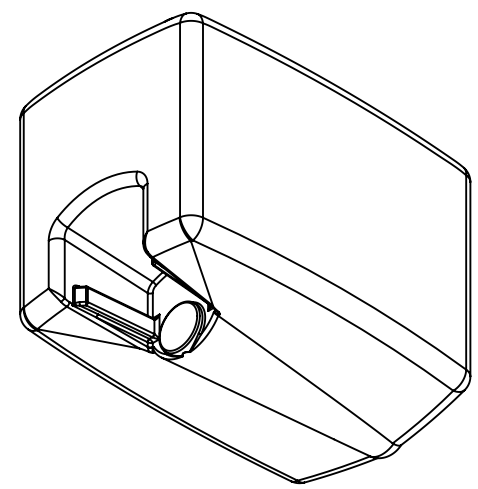

Generella toleranser om ej annat ages på ritning / General tolerances if not other stated on drawing	Tillåtna avvikelser för längdbasmåttsområde / Permissible devietions for basic lenght size range				
	0-20	>20-75	>75-150	>150-300	>300
	± 0,5 mm	± 1 mm	± 1,5 mm	± 1,3 %	± 1 %

Konstruerad av	Granskad av	Godkänd av - datum	Generell tolerans	Generell Ytjämnhet, Ra	Vyplacering	Skala
SE	SE	SE - 2005-09-12	SS-ISO 2768-1			1:10

Ägare

CIPAX

Titel/Benämning

Transp. Behållare 500 liter 40500

Ritningsnummer	Utgåva	Blad
S3-2778		1(1)

This drawing and design is the property of Cipax.
Copying and distribution of the drawing or any contents
is prohibited whitout written permission from authorised
personal at Cipax