CPX Storage tank 10000L natural

Manhole Ø 600 mm

Art.nr: 18013

Approximate size

Specifications	
Material	PE
Shape	Cylindrical
Bottom shape	Straight
Design	Closed
Lid type	
Color	Natural
Volume (L)	10000
Height (mm)	3285
Diameter (mm)	2140
Surface area (m2)	4.6
Weight (kg)	435
Tare weight (max kg/l)	1.85
Tollstatistical code	3925100000
GTIN	7090046760825
Recycling	2 HDPE

Characteristics

Customizable containers
Recyclable
Wide temperature range
Chemical resistance
Leak test
Logistics solutions
Suitable for food contact
Easy to clean

Printed 12/10/2024

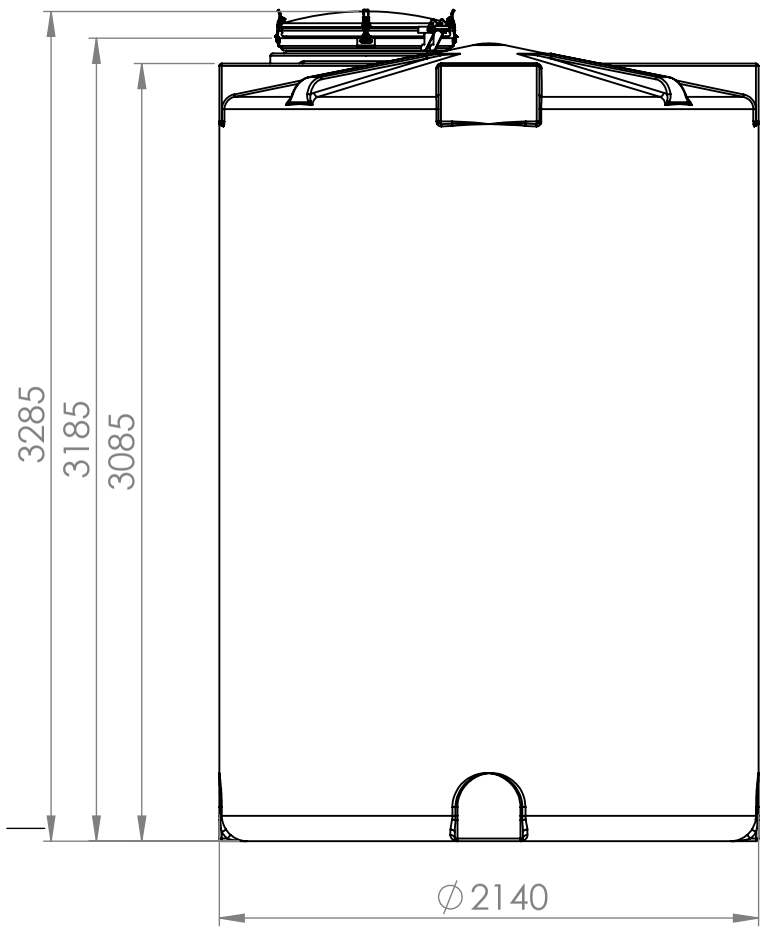

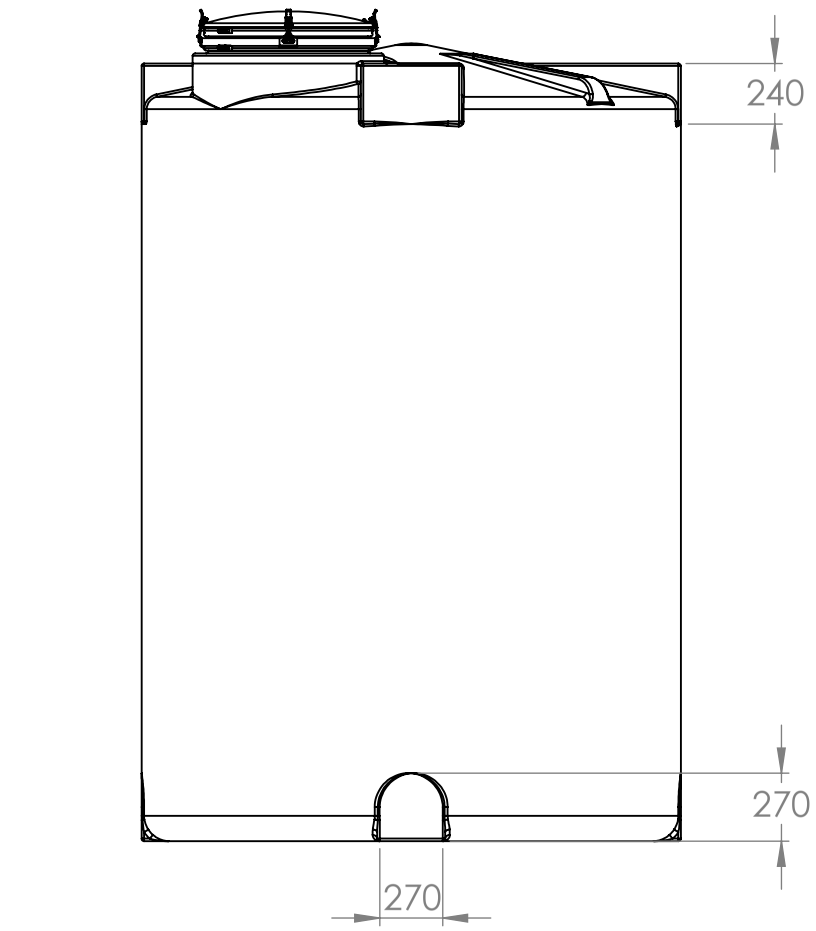

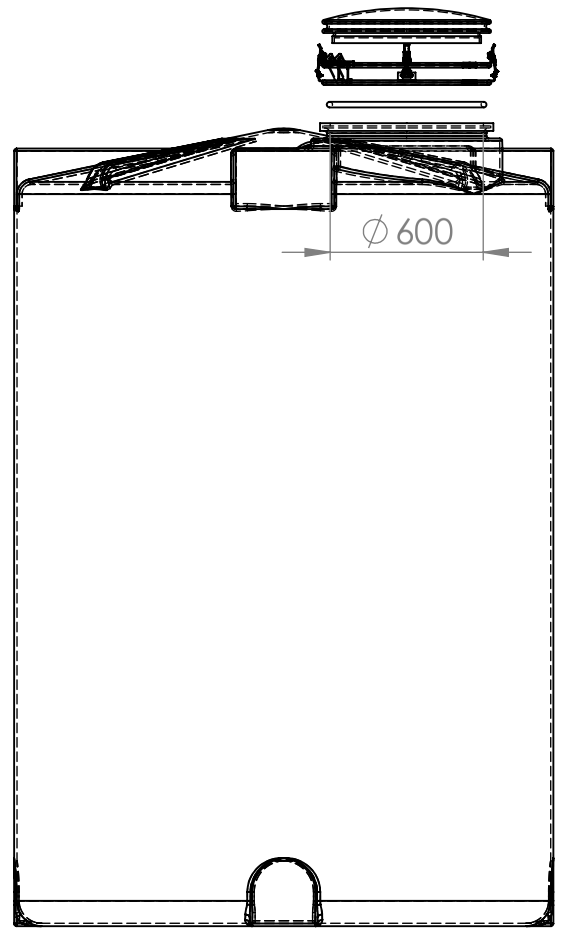

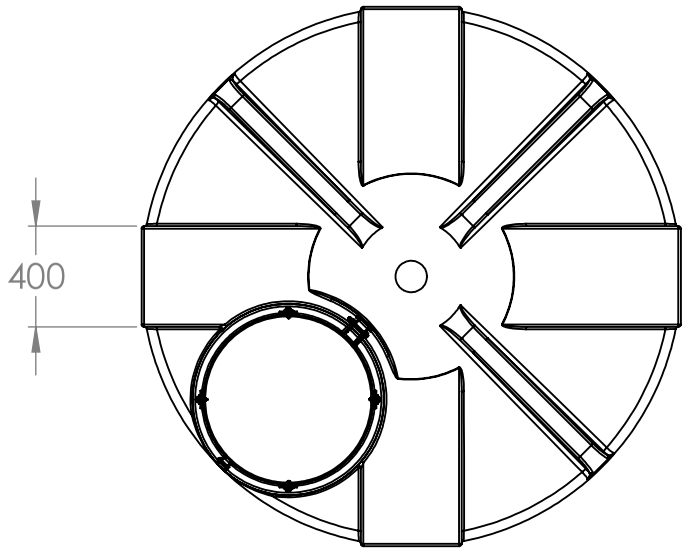

For tare weight 1.85 kg/dm3
*Manhole requires additional 800mm of height to fully open

Generelle toleranser om ikke annet er oppgitt på tegning	Tilatte avvik for måleområde. Gjelder ved +20˚C Permissible deviations for basic length size range. Valid +20˚C				
General tolerances if not other stated on drawing	0-20	>20-75	>75-150	>150-300	>300
	±0,5mm	±1mm	±1,5mm	±1,3%	±1%

Constructed by - date	Evaluated by	Approved by - date	General Tolerances		Finish, Ra	View	Scale
GEP 15.03.2024			NS-ISO 2768-1	PE			1:30

Owner: CIPAX

Titel/Description: 18013 CPX storage 10000L Natural

Drawing number	Revision	Sheet size	Sheet
1440 - 314		A3	1(2)