CPX Storagetank 10000L conical bottom painted stand

Height including stand: 4030 mm Height excluding stand: 3600 mm. For fluids with density up to 1,85

Art.nr: 18030

Approximate size

Specifications	
Material	PE
Shape	Cylindrical
Bottom shape	Conical
Design	Closed
Lid type	
Color	Natural
Volume (L)	10000
Height (mm)	4030
Diameter (mm)	2140
Surface area (m2)	5
Weight (kg)	930
Tare weight (max kg/l)	1.85
Recycling	2 HDPE

Characteristics

Customizable containers
Recyclable
Wide temperature range
Chemical resistance
Leak test
Logistics solutions
Suitable for food contact
Easy to clean

Printed 28/04/2024

REVISIONS				
ZONE	REV.	DESCRIPTION	DATE	APPROVED
	A	Renamed part to 1225741.Made a new drawing and updated views. M.P	22.04.2013	

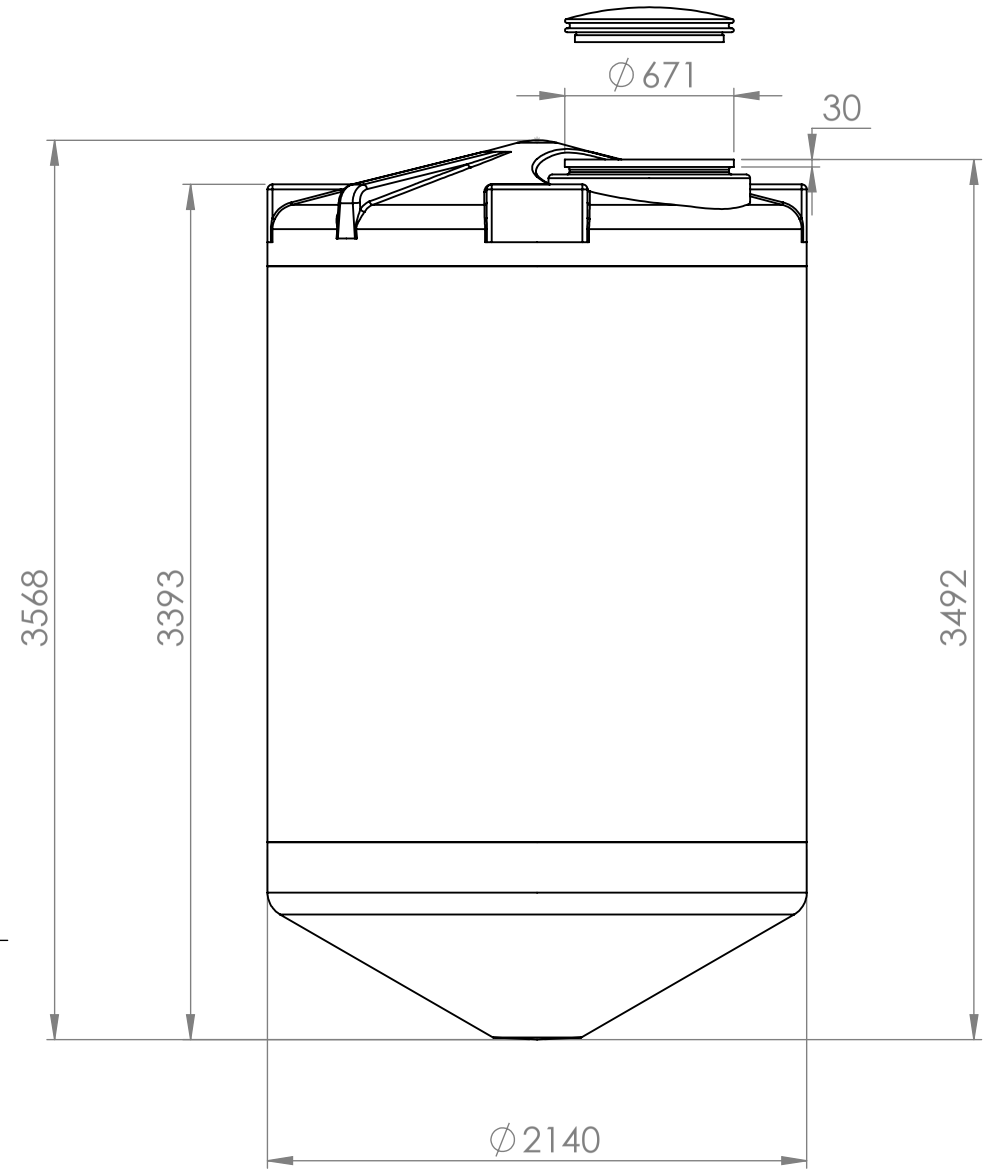

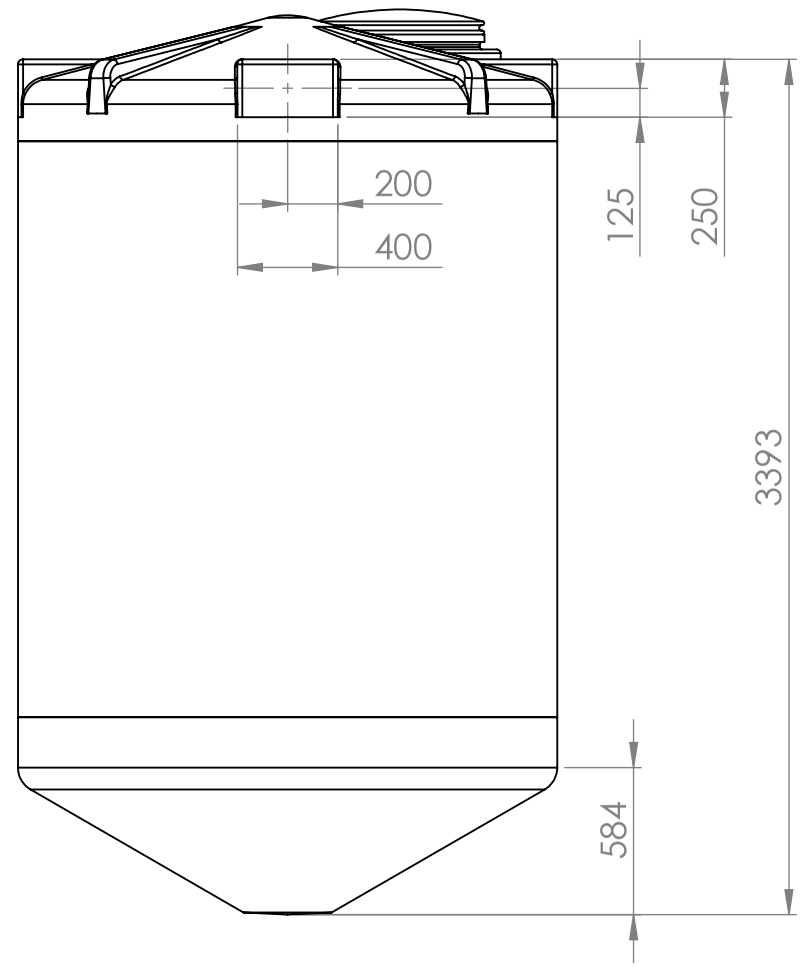

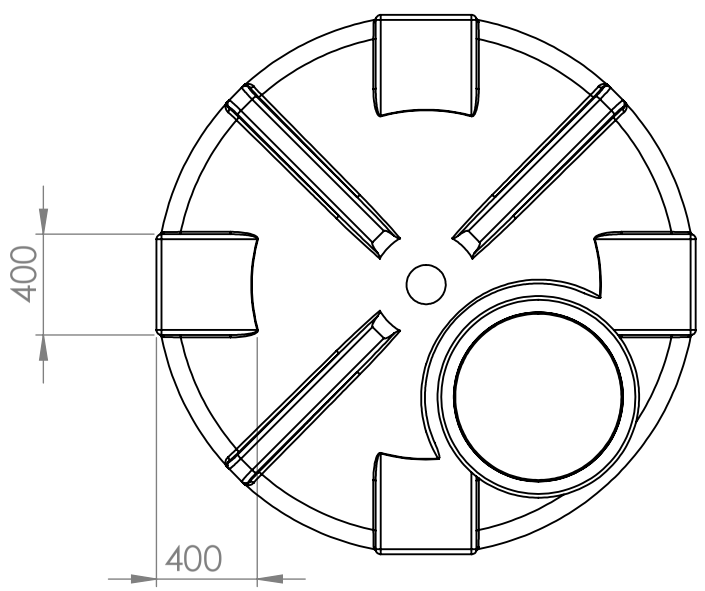

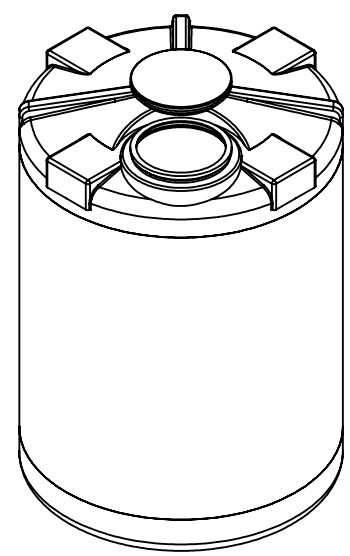

"Manhole requires 800 mm space to open fully.Compared to maximum hight"

Generelle toleranser om ikke annet er oppgitt på tegning	Tilatte avvik for måleområde. Gjelder ved +20˚C Permissible deviations for basic length size range. Valid +20˚C				
General tolerances if not other stated on drawing	0-20	>20-75	>75-150	>150-300	>300
	±0,5mm	±1mm	±1,5mm	±1,3%	±1%

Constructed by - date	Evaluated by	Approved by - date	General Tolerances	Material	Finish, Ra	View	Scale
M.P 22.04.2013			NS-ISO 2768-1	LDPE	grit 120		1:30

Owner: CIPAX

Titel/Description: 1225741 10000 L Kon excentric

Drawing number	Revision	Sheet size	Sheet
627 - 34	A	A3	1(2)

This drawing and design is the property of Cipax.
Copying and distribution of the drawing or any contents
is prohibited whitout written permission from authorised personal at Cipax

REVISIONS				
ZONE	REV.	DESCRIPTION	DATE	APPROVED
-	A	Renamed part to 1225741.Made a new drawing and updated views. M.P	22.04.2013	-

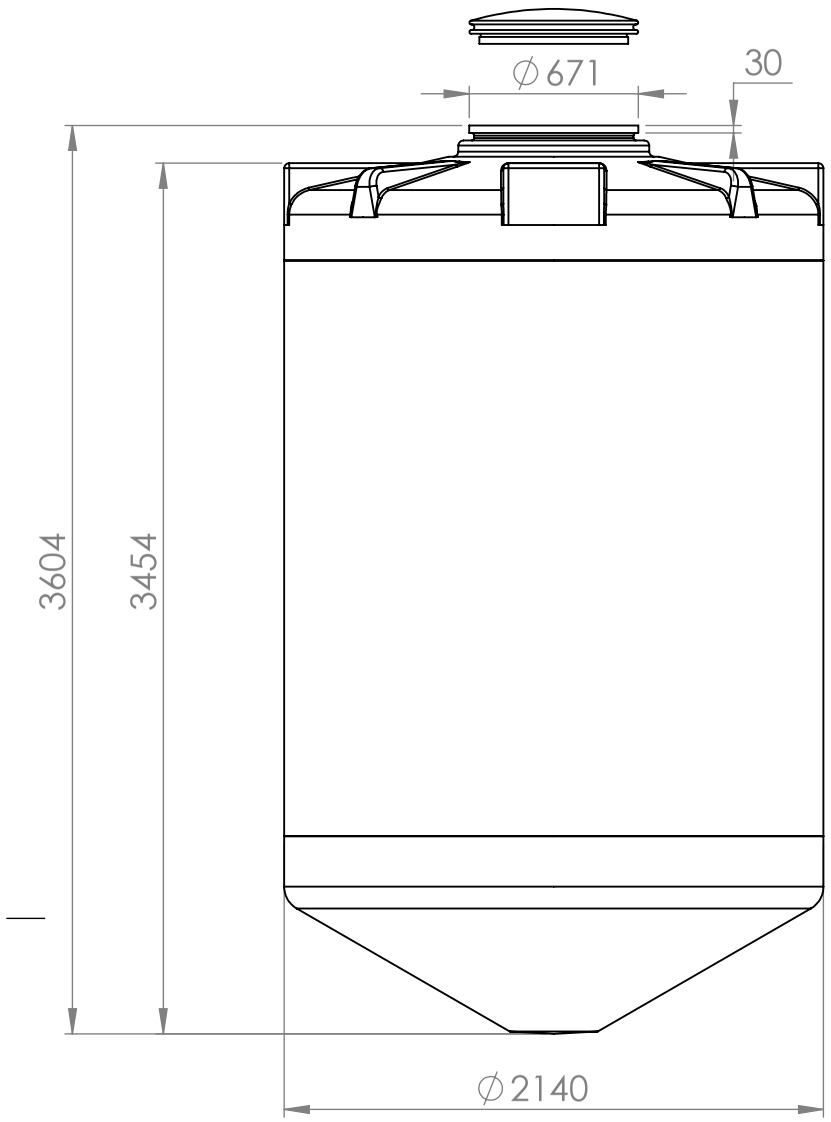

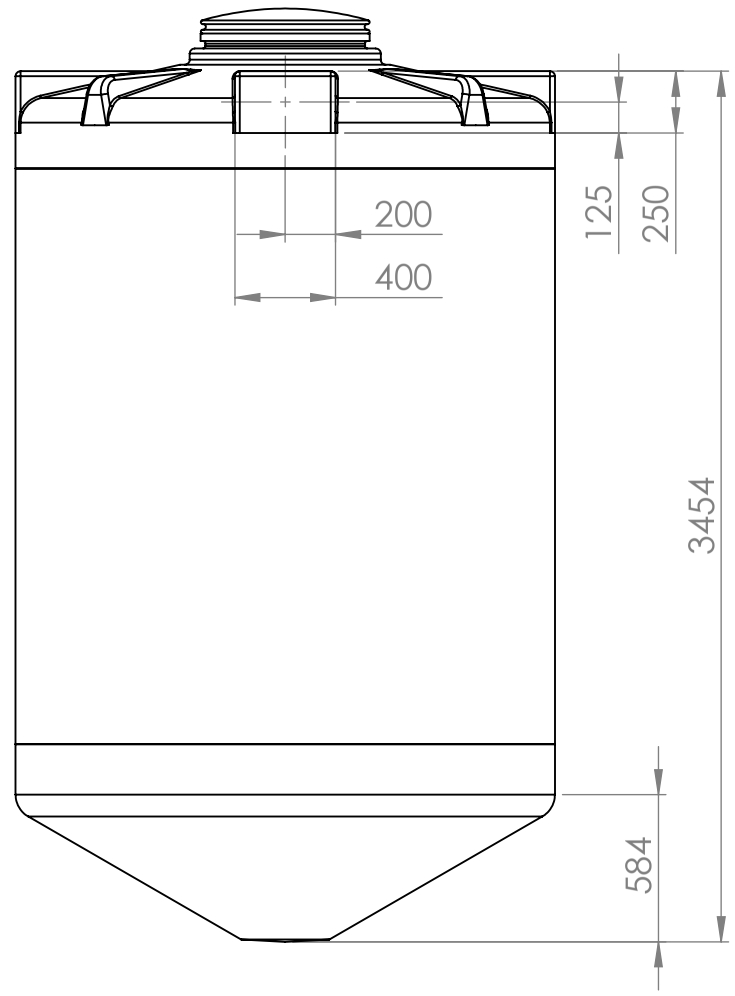

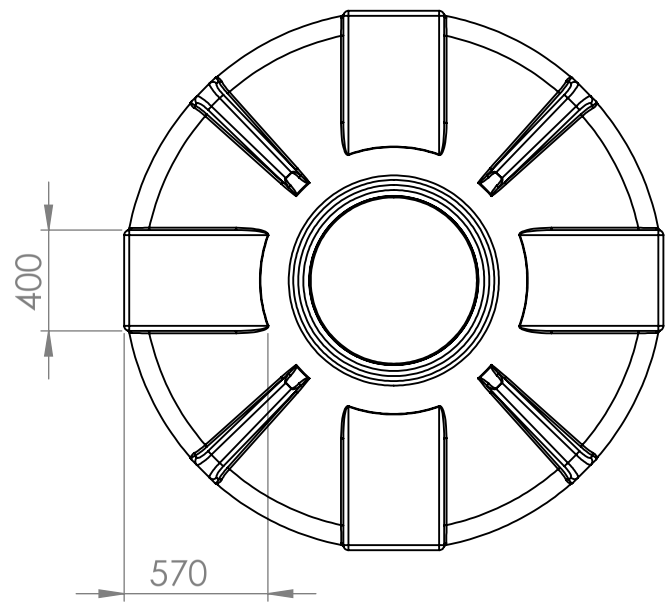

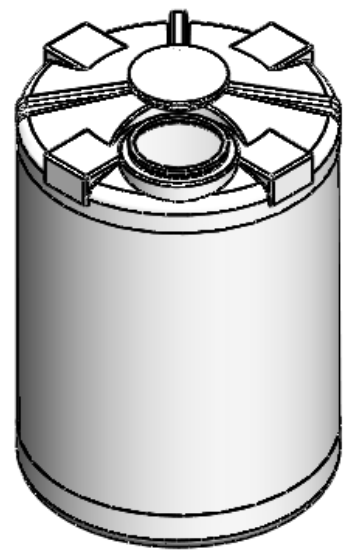

"Manhole requires 800 mm space to open fully.Compared to maximum hight"

Generelle toleranser om ikke annet er oppgitt på tegning	Tilatte avvik for måleområde. Gjelder ved +20˚C Permissible deviations for basic length size range. Valid +20˚C				
General tolerances if not other stated on drawing	0-20	>20-75	>75-150	>150-300	>300
	±0,5mm	±1mm	±1,5mm	±1,3%	±1%

Constructed by - date	Evaluated by	Approved by - date	General Tolerances	Material	Finish, Ra	View	Scale
M.P 22.04.2013			NS-ISO 2768-1	LDPE	grit 120		1:30

Owner: CIPAX

Titel/Description: 1225741 10000 L Kon center

Drawing number	Revision	Sheet size	Sheet
627 - 34	A	A3	2(2)

This drawing and design is the property of Cipax.
Copying and distribution of the drawing or any contents
is prohibited whitout written permission from authorised personal at Cipax