CPX Storage tank 15000L natural

För vätskor med densitet till 1,5

Art.nr: 15013

Approximate size

Specifications	
Material	PE
Shape	Cylindrical
Design	Closed
Lid type	
Color	Natural
Volume (L)	15000
Height (mm)	4770
Diameter (mm)	2140
Surface area (m2)	4.6
Weight (kg)	630
Tare weight (max kg/l)	1.5
Tollstatistical code	3925100000
GTIN	7090046760351
Recycling	2 HDPE

Characteristics

Customizable containers
Recyclable
Wide temperature range
Chemical resistance
Leak test
Logistics solutions
Suitable for food contact
Easy to clean

Printed 12/10/2024

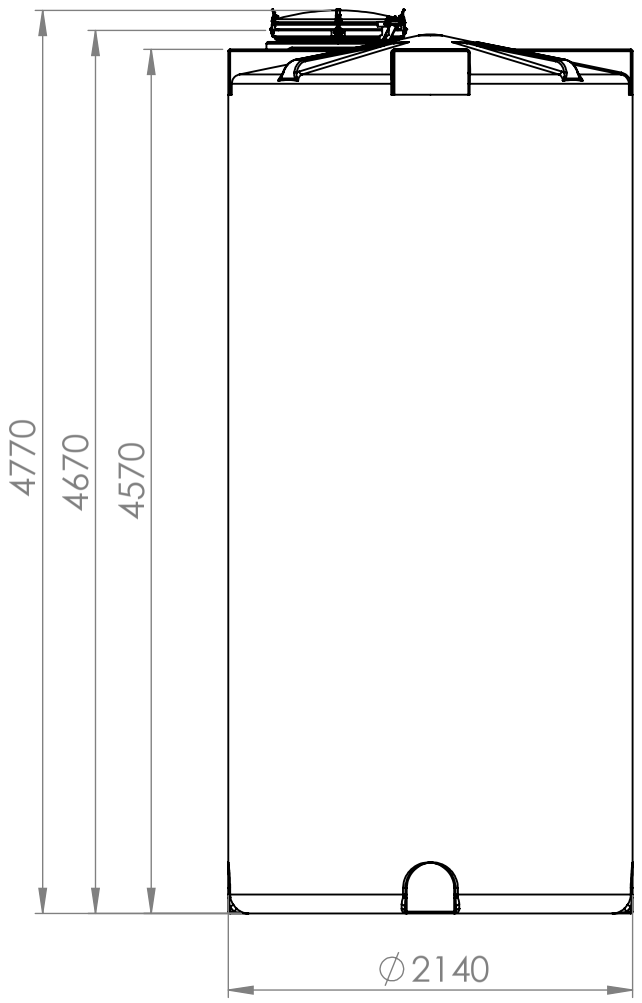

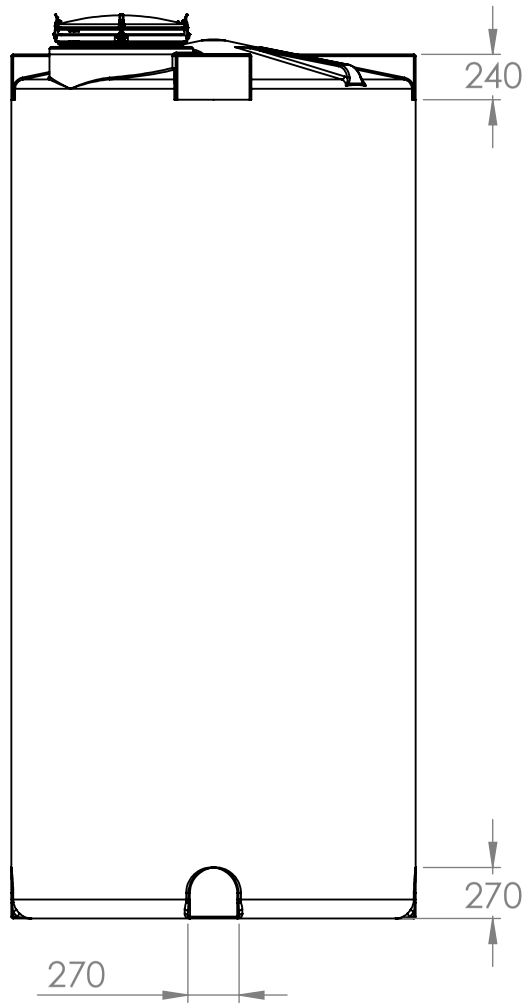

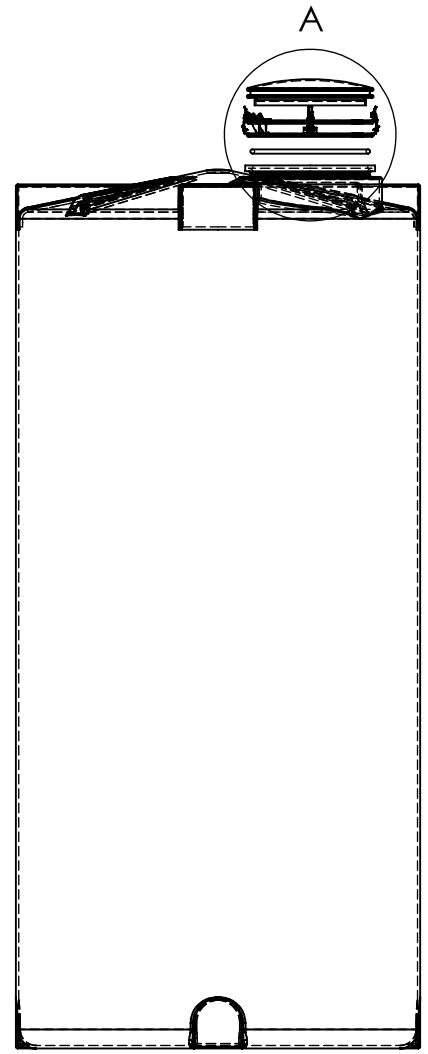

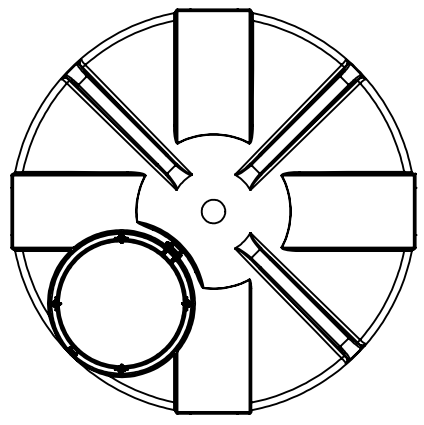

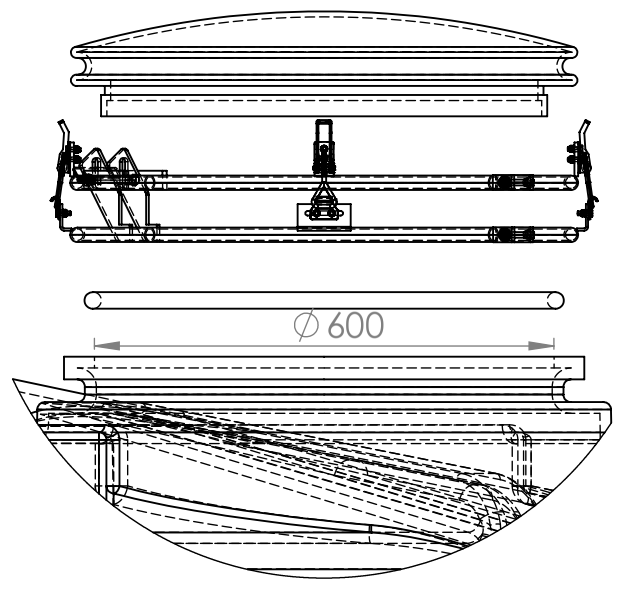

DETAIL A
SCALE 1 : 10

For tare weight 1.5 kg/dm3
*Manhole requires additional 800mm of height to fully open

Generelle toleranser om ikke annet er oppgitt på tegning	Tilatte avvik for måleområde. Gjelder ved +20˚C Permissible deviations for basic length size range. Valid +20˚C				
General tolerances if not other stated on drawing	0-20	>20-75	>75-150	>150-300	>300
	±0,5mm	±1mm	±1,5mm	±1,3%	±1%

Constructed by - date	Evaluated by	Approved by - date	General Tolerances		Finish, Ra	View	Scale
GEP 18.03.2024			NS-ISO 2768-1	PE			1:40

Owner: CIPAX

Titel/Description: 15013 CPX storage 15000L Natural

Drawing number	Revision	Sheet size	Sheet
1448 - 314		A3	1(2)